REVISIONS				
ZONE	LTR	DESCRIPTION	DATE	APPROVED

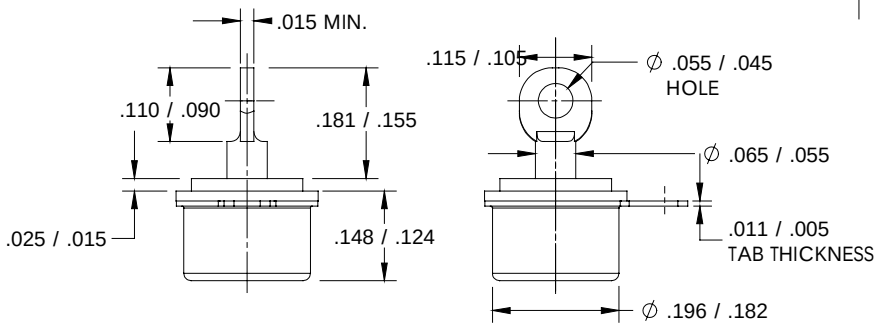

NOTES:

PART NO. 3BTL8-*-**
PART NO. 3BTF8-*-**

"L" DESIGNATES OPEN ON TEMPERATURE RISE
"F" DESIGNATES CLOSE ON TEMPERATURE RISE

* WHEN CUSTOMER'S TEMPERATURE CHARACTERISTICS ARE ESTABLISHED, A DASH NO. WILL BE ASSIGNED, THEREBY COMPLETING THE PART NO.

** IF WIRE LEADS ARE REQUIRED, A SECOND DASH NO. WILL BE ASSIGNED TO THE COMPLETED PART NO. THEREBY COMPLETING THE PART NO.

NOTE:

1) TERMINAL FLAT MAX BE AT A RANDOM ORIENTATION WITH RESPECT TO THE CUP TAB CENTERLINE.

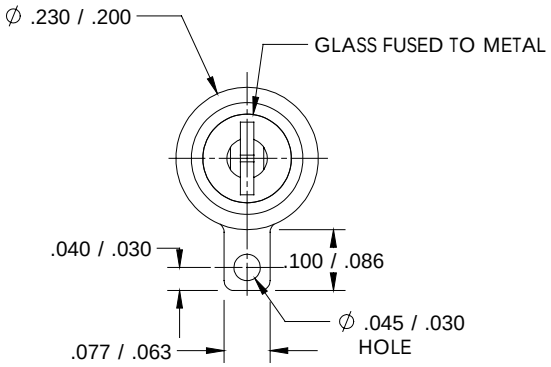

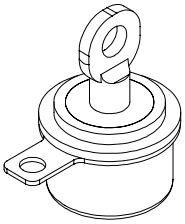

NEITHER THIS PRINT NOR THE INFORMATION CONTAINED THEREON IS TO BE USED AGAINST THE INTEREST OF TEXAS INSTRUMENTS, INC. OR AGAINST THE INTERESTS OF ANY OF ITS AFFILIATED COMPANIES OR WHOLLY OWNED SUBSIDIARIES.

FOR REFERENCE ONLY
CONSULT TEXAS INSTRUMENTS CUSTOMER SERVICE FOR LATEST REVISION BEFORE USE

THIS IS A CAD DRAWING. THE GEOMETRY IN THE ASSOCIATED CAD COMPUTER FILE IS DIMENSIONALLY ACCURATE. WHEN DRAWING IS BEING REVISED, THE GEOMETRY MUST BE UPDATED IN ALL VIEWS AND ON ALL SHEETS.

UNLESS OTHERWISE SPECIFIED DIMENSIONS ARE IN INCHES	DRAWN S. MARQUIS	DATE 3/25/02	TEXAS INSTRUMENTS ATTLEBORO, MA 02703	KLIXON CONTROL PRODUCTS DIVISION
TOLERANCES ON FRACTIONS, DECIMALS, ANGLES	ENGINEER		TITLE THERMOSTAT SWITCH ENVELOPE DRAWING	
	APPROVED			
MATERIAL	APPROVED			
			SIZE B / CODE IDENT NO. 82647	3BT-8 STYLE
	SIGNATURES ON FILE. REFER TO ELECTRONIC CHANGE NOTICE		SCALE	SHEET